Wall mount bracket indoor/outdoor

NVB-SD6500JB



DIMENSIONS

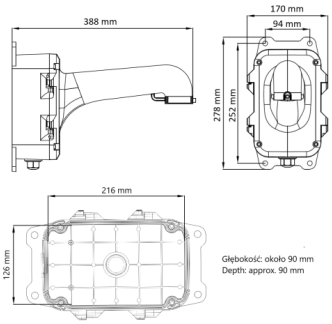

Type	wall mount adapter, indoor/outdoor
Application	4000, 6000 and 8000 series speed dome cameras (a detailed list of compatible cameras and other products is available on the website, in the file in the "Downloadable Files" tab)
Material	aluminium
Color	white
Load Capacity	15 kg
Dimensions (mm)	170 (W) x 388 (H) x 278 (L)
Weight	2.5 kg