Dual PTZ IP Camera (Thermal/Visual)

NVIP-5DPT-8703/30/T/25



FUNCTIONS

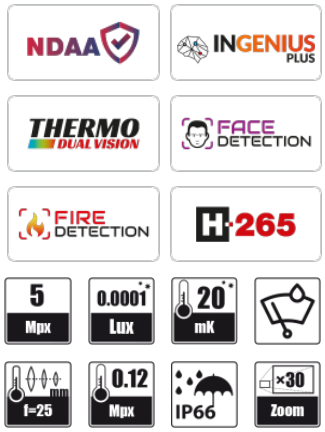

KEY FEATURES

- Resolution: 5 MPX
- Lens: motorized varifocal, AI and AF function, optical zoom 30x, f=5.3 ~ 159 mm/F1.6 ~ 4.4
- lens: thermal fixed focal length, f=25 mm/F1.0
- built-in lens cleaning wiper
- D/N function - IR cut filter
- Video content analysis based on Deep Learning
- WDR with double scan sensor
- Temperature Measurment - Thermal Module.
- Temperature Alarm - Thermal Module
- Ability to observe in total darkness - Thermal Module
- two-way audio
- Min. Illumination from 0.0001 lx

DIMENSIONS

Image - Thermal Module	
Image Sensor	Uncooled FPA Microbolometer
Number of Effective Pixels	384 (H) x 288 (V)
Pixel Size	17 µm
Spectral Range	8 - 14 µm
Thermal Sensitivity	20 mK
Thermovision Modes	White Hot, Black Hot, Rainbow, Ironbow, HSV, Autumn, Bone, Cool, Copper, Fire Hot, Pink, Spring, Summer, Winter, Jet, Flame, Rosebengal
Detection Temperature Range	-20°C ~ 150°C
Digital Noise Reduction (DNR)	2D, 3D
Lens - Thermal Module	
Lens Type	fixed focal length, f=25 mm/F1.0
DRI (Detection, Recognition, Identification)	people: D - 735m, R - 184m, I - 92m vehicles: D - 2255m, R - 564m, I - 282m
Object Detection Range	735m - fire (for object size 1x1 m)
Temperature measurement range	294m (for object size 1x1 m)
Image	
Image Sensor	5 MPX CMOS sensor 1/2.8" SONY STARVIS
Number of Effective Pixels	2592 (H) x 1944 (V)
Min. Illumination	0.005 lx/F1.6 - color mode, 0.0001 lx/F1.6 - B/W mode
Electronic Shutter	auto: 1/5 s ~ 1/100000 s
Digital Slow Shutter (DSS)	up to 1/5 s
Wide Dynamic Range (WDR)	yes (double scan sensor), 120dB
Digital Image Stabilization (DIS)	yes
Digital Noise Reduction (DNR)	2D, 3D
Defog Function (F-DNR)	yes
Highlight Compensation (HLC)	yes
Back Light Compensation (BLC)	yes
Lens	
Optical Zoom	30x
Lens Type	motorized, auto-iris function, f=5.3 ~ 159 mm/F1.6 ~ F4.4
Auto-focus	zoom trigger, manual trigger
DORI	
DORI (Detection, Observation, Recognition, Identification)	for f = 5.3mm - D: 103m, O: 41.2m, R: 20.6m, I: 10.3m for f = 159mm - D: 3090m, O: 1236m, R: 618m, I: 309m
Day/Night	
Mode	day/night switching: mechanical IR cut filter
Switching Mode	auto, time
Switching Level Adjustment	yes
Switching Delay	0 ~ 180 s
Network	
Stream Resolution	2592 x 1520, 2592 x 1944, 1920 x 1080 (Full HD), 1280 x 720 (HD), 720 x 576 (D1), 640 x 480 (VGA), 352 x 288 (CIF), 320 x 240 (QVGA) for thermal module: 1280x1024, 1280 x 720, 384x288
Frame Rate	30 fps for each resolution
Multistreaming Mode	number of streams: 3 (main stream, sub stream, third stream)
Video/Audio Compression	H.264, H.265, MJPEG/G.711, RAW_PCM
Number of Simultaneous Connections	max. 10
Bitrate	for H.264 : 100 kbps - 12000 kbps for H.265 : 100 kbps - 12000 kbps for thermal module (H.264): 10 kbps - 8000 kbps for thermal module (H.265): 10 kbps - 8000 kbps
Network Protocols Support	HTTP, TCP/IP, IPv4/v6, UDP, HTTPS, Multicast, FTP, DHCP, DNS, DDNS, NTP, RTSP, RTP, UPnP, SNMP, QoS, IEEE 802.1X, PPPoE, SMTP, RTCP, HTML5
Camera Configuration	from Edge, Firefox, Chrome browser languages: Polish, English, and others
Compatible Software	NOVUS MANAGEMENT SYSTEM VSS, NOVUS MANAGEMENT SYSTEM AC
PTZ	
Preset Commands	400
Tours	12 (up to 32 presets per tour)
Auto-Scans	8
Patterns	6
Tilt/Pan Range	-90° ~ 90°/360° (continuous)
Pan/Tilt Speed	up to 60°/s (proportional to zoom)
Preset Speed	up to 60°/s
Video Analytics	
Functions	line cross, zone entrance, zone exit, double line cross, loiter, wrong direction, face detection, objects distinguishing, people counting, vehicle detection, fire detection, smoke detection, smart motion detection with objects distinguishing, video metadata, illegal parking detection, running detection, fall detection, fight detection for thermal module: line cross, double line cross, intrusion detection, zone entrance, zone exit, fire detection, temperature measurement, intrusion detection, SMART motion detection, loiter, wrong direction, pedestrian detection, vehicle detection, objects distinguishing, people counting, smoker detection, fire spot detection
Other functions	
Temperature Measurement	yes
Temperature Alarm	yes

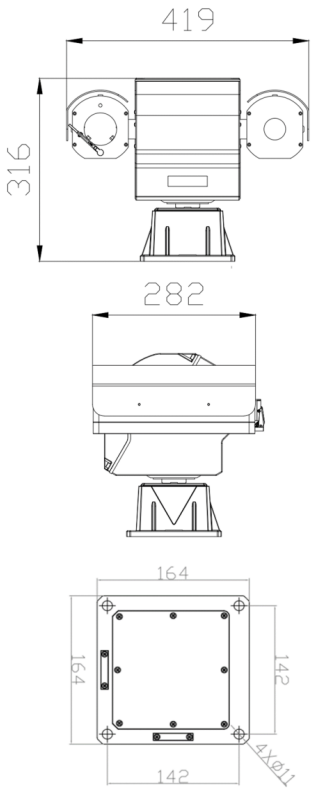

Temperature Measurement Zones	20 - for thermal module polygon, line, point
Temperature Measurement Accuracy	+-2°C / +-2%
Security	configuration encryption, IEEE 802.1X support, HTTPS support, IP and/or MAC address filtering, force change of default password
Privacy Zones	4 video mask type: single color
Motion Detection	yes
Region of interest (ROI)	8
Image Processing	mirror effect
System Reaction to Alarm Events	e-mail with attachment, saving file on FTP server, alarm output activation, playback of the audio message
Restoring default settings	via web browser
Interfaces	
Video Output	2 x BNC, 1.0 Vp-p, 75 Ohm
Audio Input/Output	1 x Jack (3.5 mm)/1 x Jack (3.5 mm)
Alarm Input/Output	9 (NO/NC)/4
Control Input/Output	RS-485
Network Interface	1 x Ethernet - RJ-45 interface, 10/100 Mbit/s
Installation parameters	
Dimensions (mm)	with bracket: 419 (W) x 316 (H) x 282 (L) 4 m long connection cables
Weight	16.5 kg
Degree of Protection	IP 66 (details in the user's manual)
Enclosure	aluminium, white, with built-in lens wiper, Enclosure type: 8S
Power Supply	36 VDC (power supply included)
Power Consumption	80 W
Operating Temperature	-40°C ~ 60°C
Cold start temperature	-40°C
Humidity	max. 95%, relative (non-condensing)
Built-in Heater/Fan	yes/yes